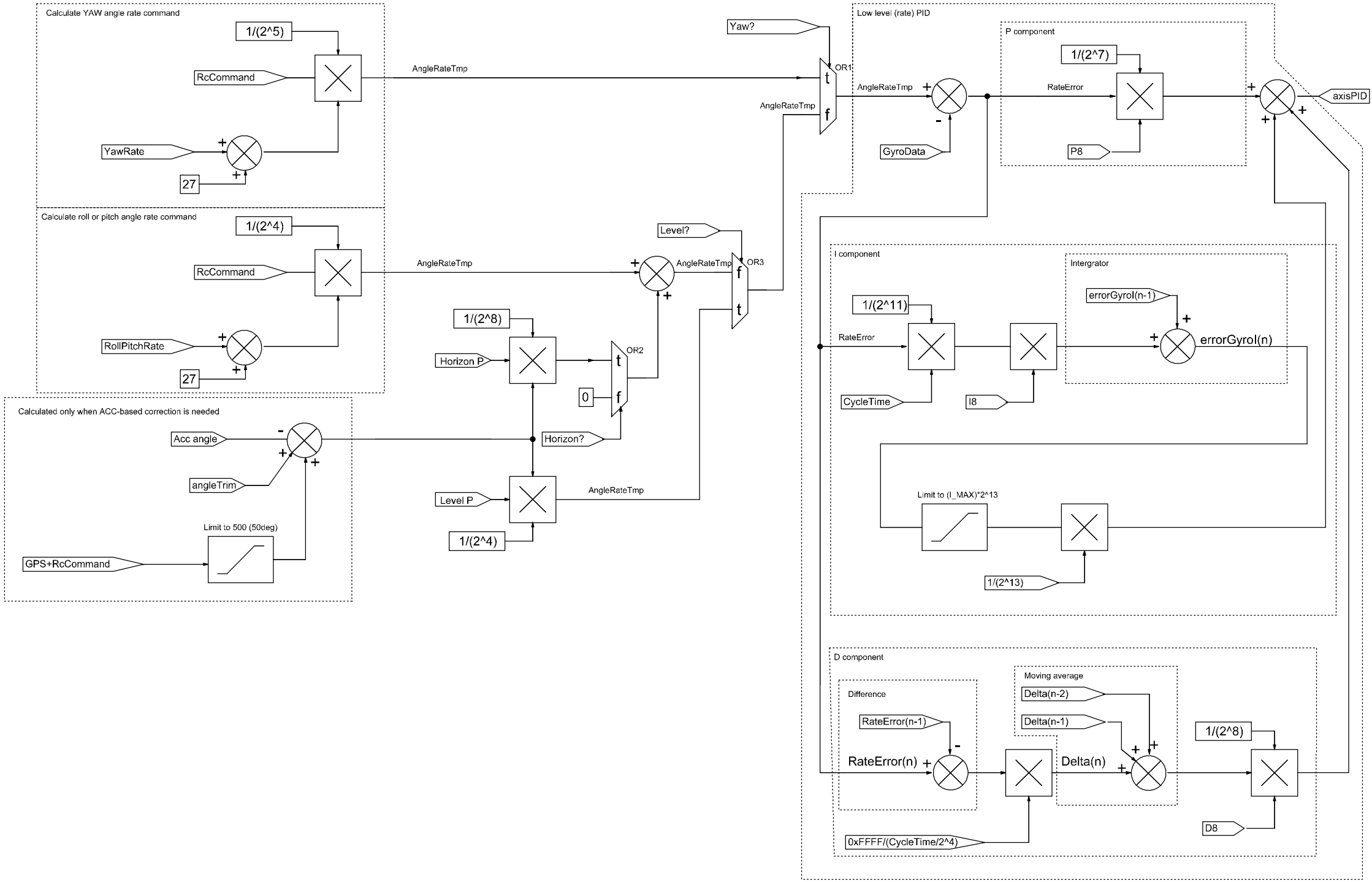
Calculate YAW angle rate command
1/(2^5)
RcCommand
YawRate
27
AngleRateTmp
Yaw?
OR1
t
f
AngleRateTmp
Calculate roll or pitch angle rate command
1/(2^4)
RcCommand
RollPitchRate
27
AngleRateTmp
Level?
AngleRateTmp
OR3
f
t
1/(2^8)
Horizon P
OR2
t
f
0
Horizon?
Calculated only when ACC-based correction is needed
Acc angle
angleTrim
Limit to 500 (50deg)
GPS+RcCommand
Level P
1/(2^4)
AngleRateTmp
Low level (rate) PID
P component
1/(2^7)
AngleRateTmp
RateError
GyroData
P8
axisPID
I component
Intergrator
errorGyroI(n-1)
1/(2^11)
RateError
errorGyroI(n)
CycleTime
I8
Limit to (I_MAX)*2^13
1/(2^13)
D component
Moving average
Difference
Delta(n-2)
Delta(n-1)
RateError(n-1)
RateError(n)
Delta(n)
1/(2^8)
D8
0xFFFF/(CycleTime/2^4)